SG

MAVERICK

QBit

PRO FLUX



Startup Guide

En Vol 6. 151001-006 SG

THANK YOU

Thank you for selecting this Maverick RC product!

HAVE FUN! But please read this first!!

We know you will have great fun with your model, but to get the best from your purchase, please read this information before operating your model.



Safety precautions

WARNING! THIS IS NOT A TOY

This product is an authentic hobby-grade radio-controlled vehicle (RC vehicle) and not a toy.

Please read the enclosed instructions carefully and follow all product warnings for all accessories used with this product, including batteries, chargers, tools, adhesives, electronics, and cleaning materials.

This model may require some assembly and will need regular maintenance.

Prior experience with RC models is recommended.

If you are new to radio-controlled vehicles, please ask an experienced hobbyist or retailer for advice.

- **Never connect the drive battery with reversed polarity or attempt to disassemble the battery. Incorrect handling can cause short circuits or fire and is extremely dangerous.**
- **If you are using rechargeable batteries for the transmitter, always use a compatible charger for that battery type.**
- **Do not operate, display, or test this product on public roads, in crowded places, or near people or animals. Always make sure others are aware you are using this model to prevent injury or damage.**
- **Some parts may become hot during normal operation — handle with care.**
- **This product is covered by a limited warranty. Please read the enclosed warranty details for more information. Damage caused by crashes, negligence, or improper handling is not covered under warranty.**

CONTENTS

Section	Contents	Page
	Overview	**4**
	Main car components	**5**
1	**Getting Started**	**6**
1-1	Charging the Drive Battery	6
1-2	Setting Up the Transmitter	7
1-3	Preparing the Chassis	8
2	**Setup**	**10**
2-1	ESC/Receiver Overview	10
2-2	Binding/Pairing	11
2-3	Decals	12
2-4	Optional Lights	13
3	**Switching On**	**14**
4	**Using the Transmitter**	**15**
4-1	Transmitter Information	15
4-2	Steering	16
4-3	Acceleration/Braking	16
4-4	Transmitter Indicator LEDs	17
4-5	Practice Turning	17
5	**Fail Safe System**	**18**
5-1	Checking Fail Safe	18
6	**Checking Radio Range**	**19**
7	**Basic Troubleshooting**	**19**
7-1	Steering Adjustments	19
7-2	Throttle Adjustments	21
8	**After Use**	**22**
8-1	Switching Off	22
8-2	Maintenance after driving	22
9	**Further Information**	**23**
9-1	Driving in wet conditions	23
9-2	Troubleshooting	23
9-3	ESC Programmable Settings	24
9-4	Programming the ESC	25

Additional Information

QS *Quick Start Guide* + www

TG *Technical Guide* + www

SG *This Guide* www

RM *Transmitter Manual* www

EM *ESC Guide* www

EM 1-1

NOTE - This refers to the relevant guide (as above) and the relevant section. In this example, Section 1-1 of the ESC Manual.

Components (Flux & Pro)



Radio Control Car



Transmitter



LED Set

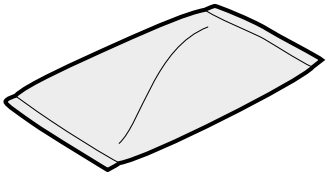

Spare parts bag

Components (Flux Models Only - 151001, 151005, 151006)



USB Battery Charger



2S Li-Po (7.4V) Battery pack

Equipment Needed

4x

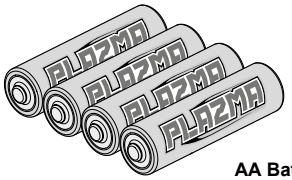

AA Batteries for Transmitter

MAIN CAR COMPONENTS

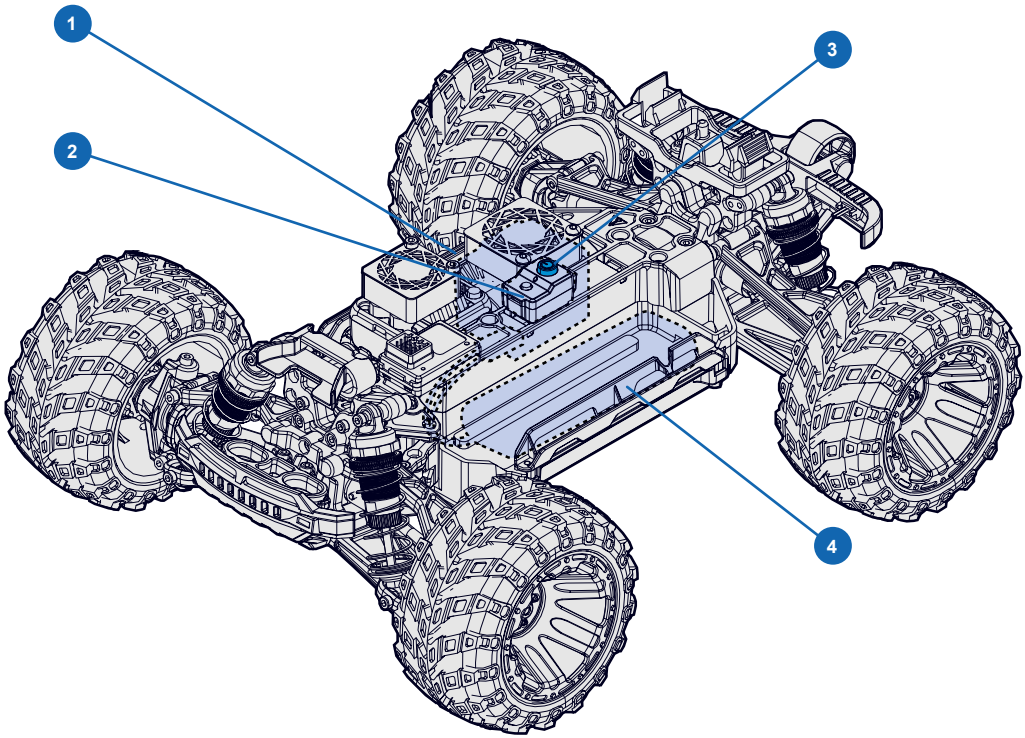

1. Motor
2. Electronic Speed Control (ESC)
3. Power Switch
4. Battery

1-1 *Charging the Drive Battery*

Caution

- **Only use the supplied charger to charge the battery pack.**
- **Do not leave the battery unattended while charging.**
- **Do not use damaged or leaking batteries or chargers.**
- **Children must not charge the battery without adult supervision.**
- **Always disconnect the battery from the ESC/Receiver and remove it from the model when not in use.**
- **Fully charge the battery before each run.**
- **Do not leave the battery uncharged for long periods.**
- **Do not fully discharge the battery during use.**
- **Charge only in dry conditions. Do not charge in wet or humid environments.**

1. Connect the charger plug to the battery pack connector

The connectors are shaped and include a clip to ensure correct connection.

Do not force them together – always check the alignment first.

2. The charger will automatically begin charging.

Charging will stop automatically once the battery is fully charged.

Error: Voltage out of charging range.

If this happens repeatedly, the battery pack may be damaged and should be replaced.

LED Status

Solid Green: Fully Charged

Flashing Green: Charging

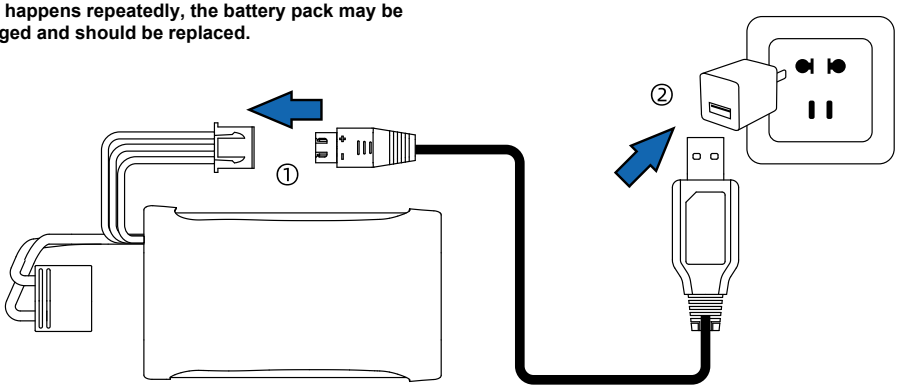

Caution **The USB charger requires a USB power adapter with an output of at least 2A.**

Caution

Do not use NiCd or NiMH battery chargers for Li-ion/LiPo batteries.

Always use a charger specifically designed for Li-ion/LiPo batteries to prevent damage.

1-2 Setting Up the Transmitter

1-2-1 Transmitter Battery Installation

1 *Open the battery cover on the bottom of the transmitter.*

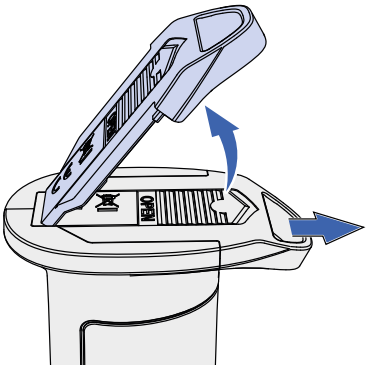

2 *Insert four 1.5V AA batteries (not included) into the battery tray. Make sure to check the polarity (+ and –) markings carefully before closing the cover*

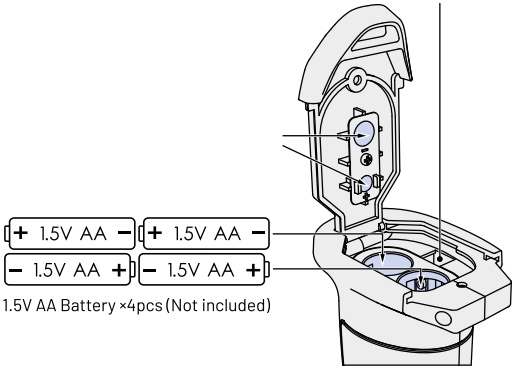

3 *Alternatively, remove the battery tray to use a compatible battery pack*

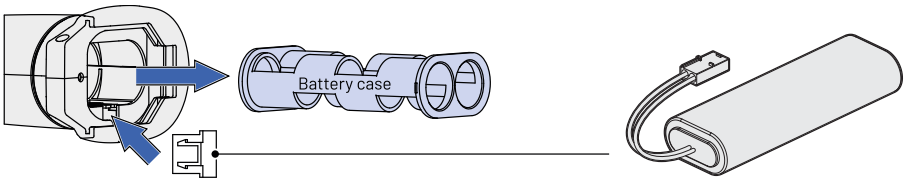

Tip

Always use high-quality alkaline or rechargeable NiMH AA batteries for best performance.

If using rechargeable batteries, remove them from the transmitter before charging.

1-3 Preparing the Chassis

1-3-1 Access Car Battery

1 *Release the rear lock by pushing in the rear lock to release and remove the bodyshell.*

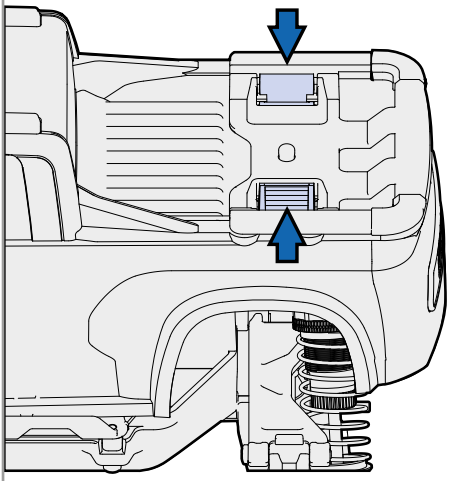

2 *Gently lift the rear of the bodyshell upwards.*

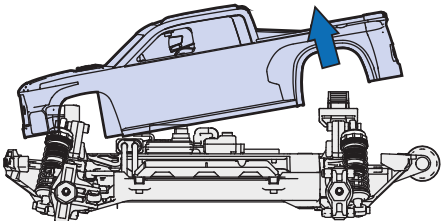

3 *Unhook the front section by pushing the bodyshell forward to disengage the front hook from the front lock.*

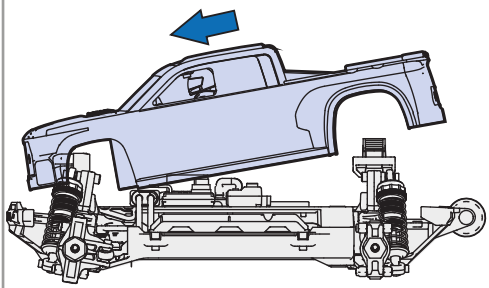

4 *Remove the bodyshell by lifting the bodyshell upwards and away from the chassis to fully remove it.*

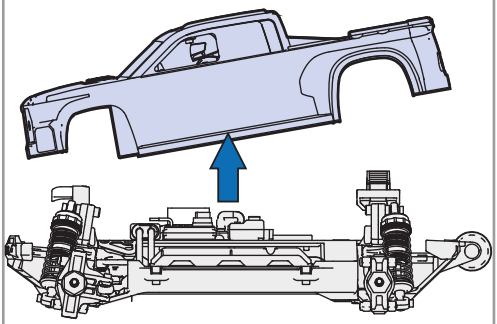

Tip

Always lift the bodyshell carefully to avoid bending or damaging the mounting hooks and clips.

1-3-2 Battery installation (Not included with PRO)

1. Place the battery into the battery compartment.

2. Fasten the battery using the Velcro strap to keep it firmly in position.

3. Connect the battery by plugging the battery connector into the ESC/Receiver input.

Make sure the connectors are aligned correctly — do not force them together.

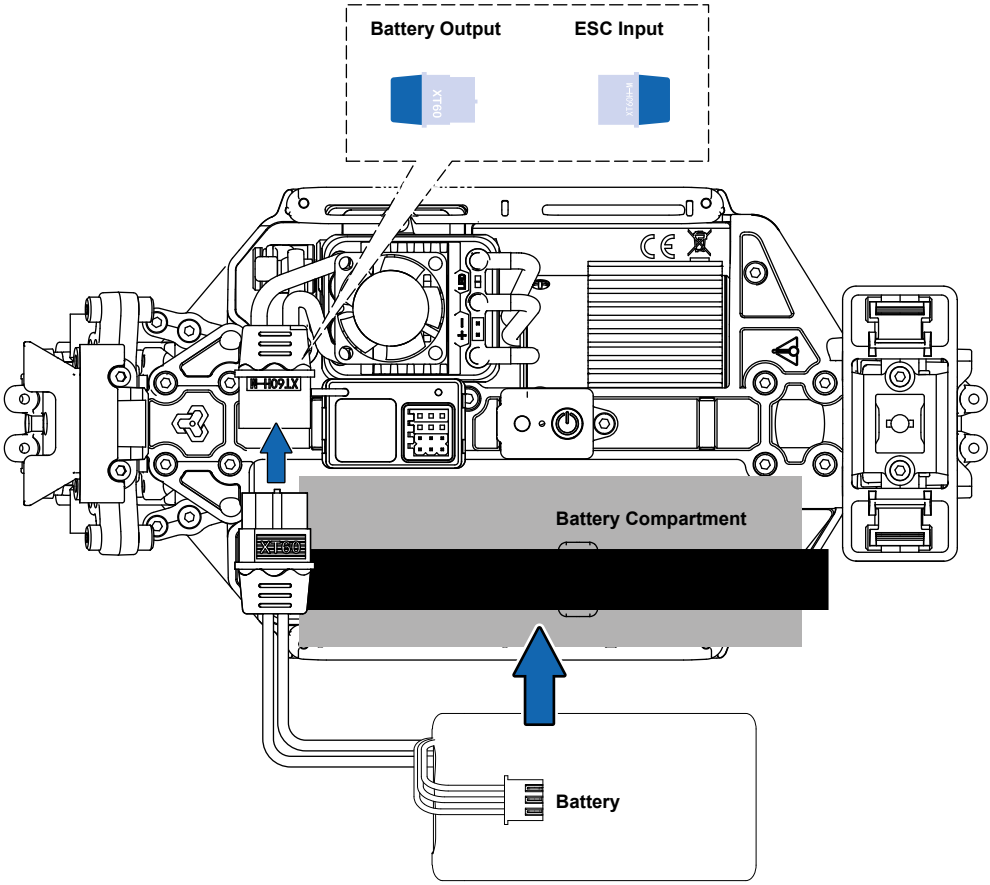

Caution

Always remove the battery from the model when not in use.

Leaving it connected or installed for long periods may cause battery damage or swelling.

2-1 *ESC/Receiver Overview*

This ESC and receiver manage motor power, steering control, and accessory outputs such as lights and fans.

The ESC and Receiver are preset at the factory for correct operation with the supplied Transmitter and Battery.

Tip

If you wish to customize your vehicle, several parameters can be adjusted.

9-3
9-4

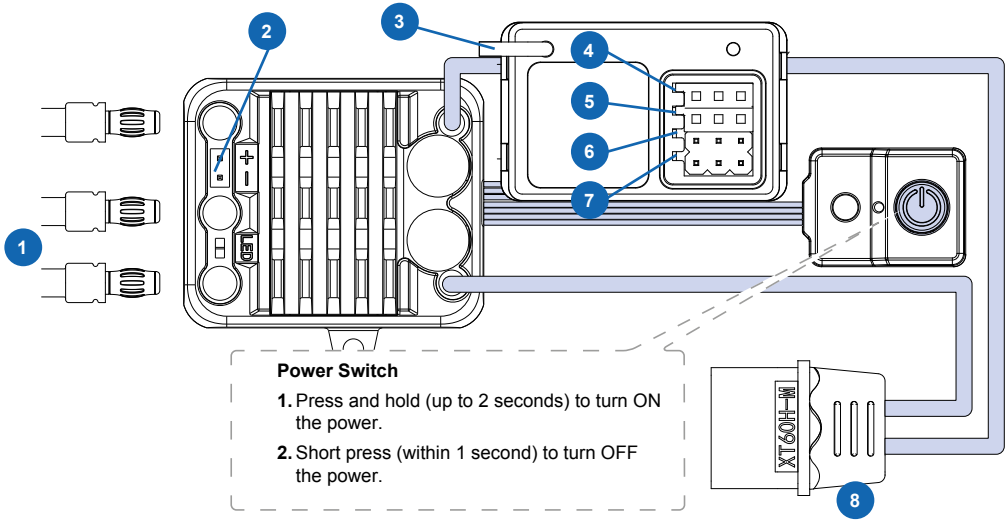

Power Switch

1. Press and hold (up to 2 seconds) to turn ON the power.
2. Short press (within 1 second) to turn OFF the power.

Connections

1. Motor Input – Connects to the motor leads.
2. ESC Fan – Supplies cooling power to the motor or ESC (if equipped).
3. Antenna – Provides signal reception from the transmitter.
4. CH1 - Steering Servo – Controls steering movement.
5. CH2 - ESC
6. CH3 Port – For optional headlights, taillights, or accessories.
7. CH4 - Motor Fan
8. Power Input – Connects to the main drive battery.

Tip

Always double-check connections before switching on to avoid short circuits or reversed polarity.

Attention

Your ESC should be set up from the factory, but if you experience throttle control issues, please consult the Throttle Calibration Mode in the ESC Parameters Settings Section.

2-2 *Binding/Pairing*

Binding (also called pairing) is the process of creating a secure connection between the transmitter and the ESC/Receiver, allowing the model to respond only to that specific transmitter. In most cases, the binding process will happen automatically when both the transmitter and the ESC/Receiver are switched ON and within range.

Cautions Any new binding of transmitter & receiver will clear the preset fail safe.

Cautions If you change transmitters or add a receiver, you must re-bind before operating your vehicle.

1 *Place the transmitter and the receiver close to each other (within one meter). Restart the ESC power supply.*

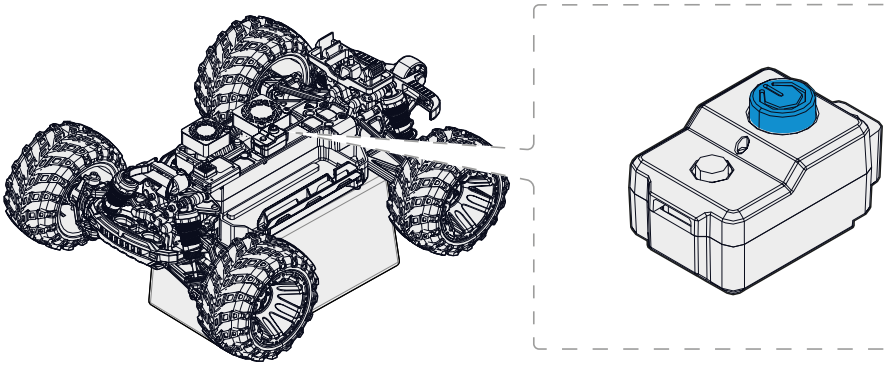

2 *Press and hold the CH3 button while turning on the transmitter power.*

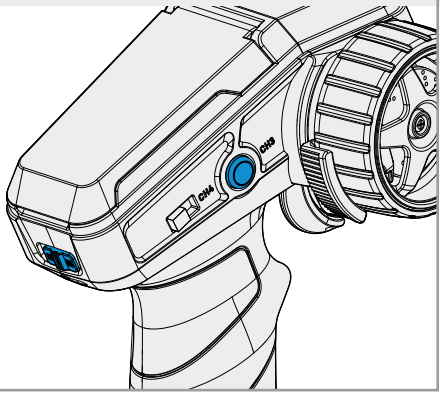

3 *Release CH3.*

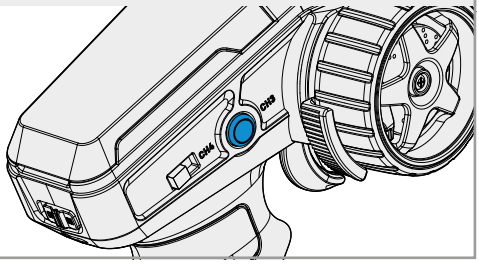

4 *When all lights stay lit continuously, pairing is successful.*

2-3 *Decals*

A decal sheet is included. Our suggestion for placement is as shown, but feel free to customize your car however you like!





2-4 Optional Lights

1 *Remove the screws to separate the bumper assembly from the buffer plate.*

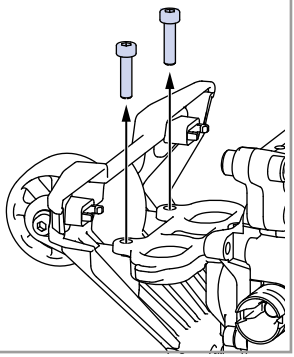

2 *Insert the LED light beads diagonally into the light holes, then straighten them so they sit securely in place. This method makes installation easier and prevents damage to the LED or housing.*

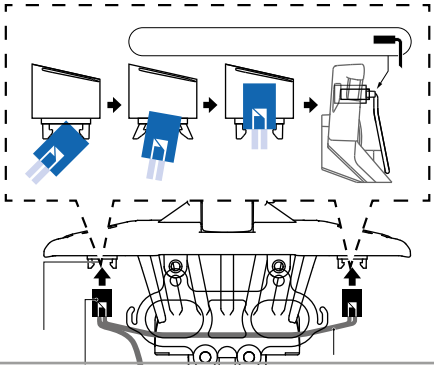

3 *Refit the screws and use cable ties (or similar) to fasten the light wires neatly to the shock tower.*

Make sure the wires are routed away from moving parts

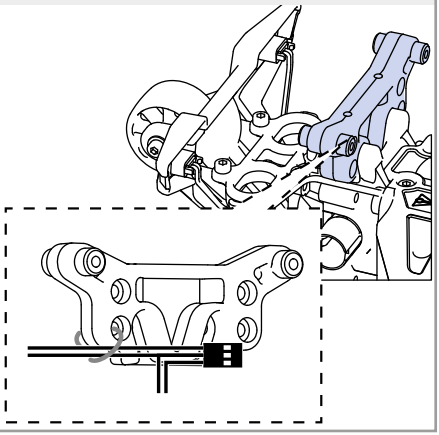

4 *Connect to the ESC/Receiver - Insert the light wire plug into the correct socket on the ESC/Receiver, ensuring the metal contacts face outwards*

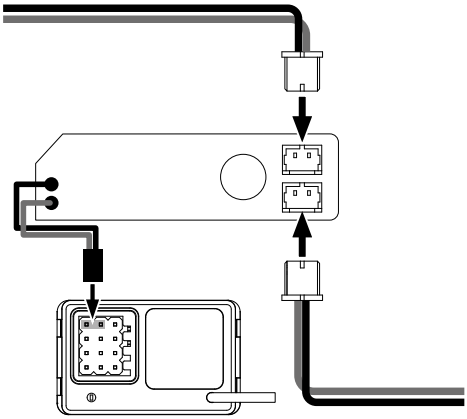

Attention

1. Check the wire lengths so they can reach the ESC/Receiver connection without strain.
2. Ensure the LED light beads are fully inserted into the light holes to prevent them from falling out.
3. Keep the wires clear of the shocks to avoid interfering with suspension movement.
4. Route the light wires beneath the bumper to prevent them from being pinched or damaged by the body.
5. Hide the light wires inside the body shell wherever possible to protect them from obstacles or debris while driving.

3 SWITCHING ON

1 *Switch on the transmitter first*

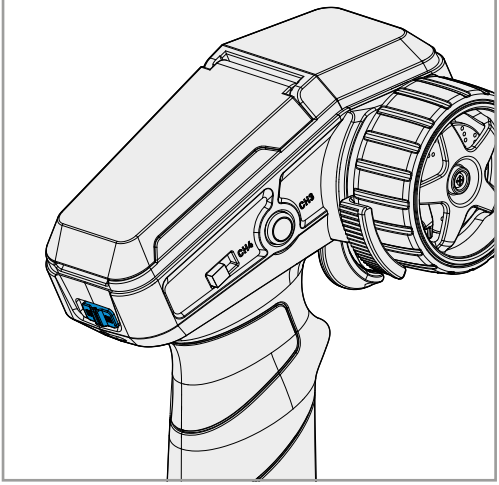

2 *Then switch on the power on the ESC*

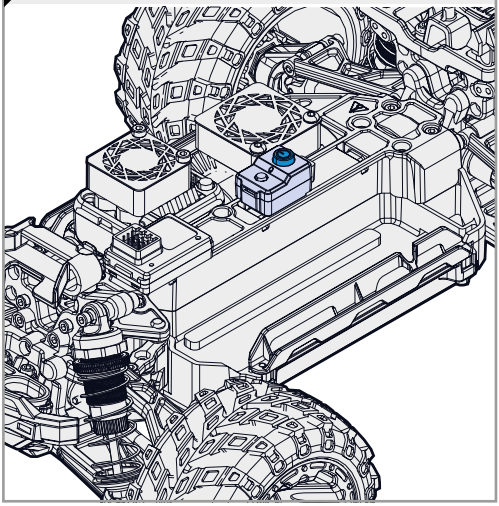

1. Always switch on the transmitter first, then power on the ESC/Receiver.

2. The transmitter and ESC/Receiver will automatically bind when both are powered on and within range. If the indicator lights remain solid, pairing is successful.

If the car does not respond to the Transmitter after switching on, try rebinding manually - see Section 2-2 for the Binding/Pairing procedure.

Tip

If you change the transmitter or receiver, rebinding is required.
Refer to Section 2-2 for full binding/pairing instructions.

4-1 *Transmitter Information*

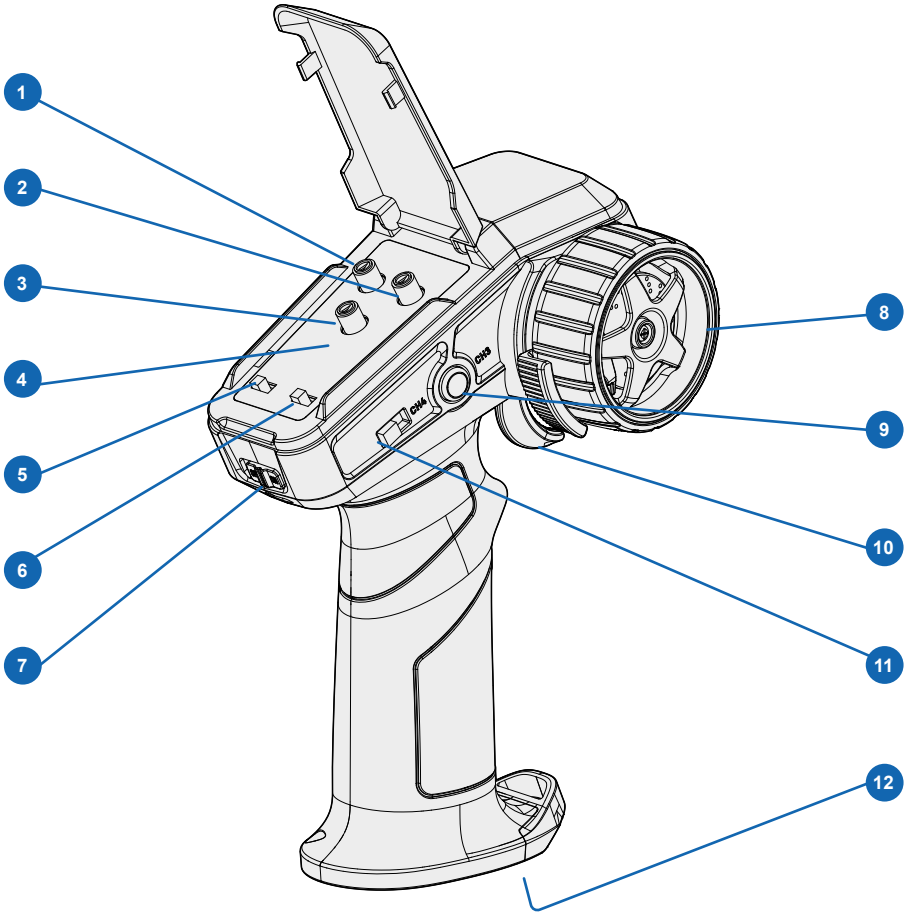

1. Steering Trim
2. Steering Dual Rate
3. Throttle Dual Rate
4. Batt Indicator
5. Reverse the throttle function
6. Reverse the steering function
7. Power on/ off
8. Steering Wheel (CH1)
9. CH3: Control Button
10. Throttle Trigger (CH 2)
11. CH4: Not in Use
12. Battery Cover

7

RM 1-2

4-2 *Steering*

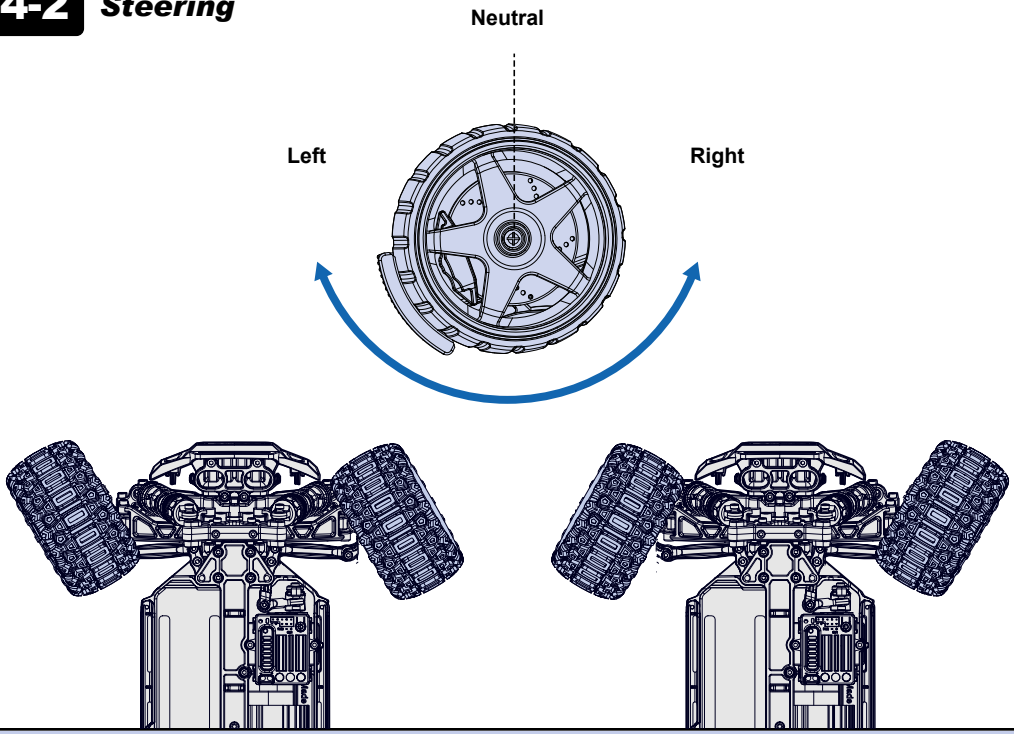

4-3 *Acceleration/Braking*

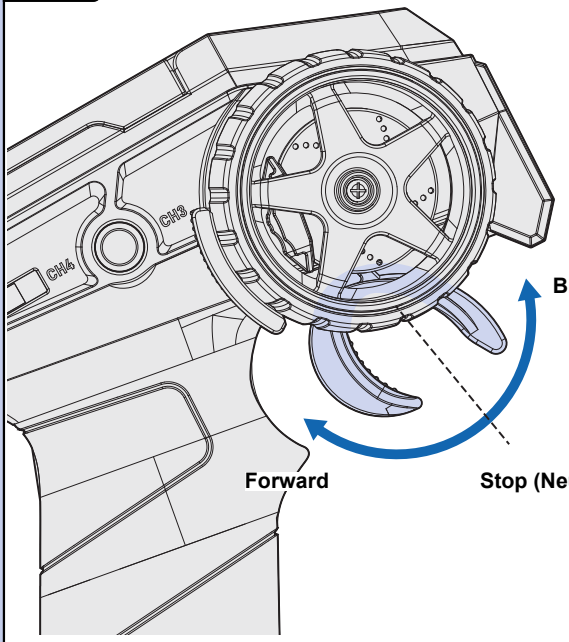

Note:

When using the transmitter with electric-powered models, always keep the throttle trigger in the neutral position when switching on.

If the trigger is not centered, the model may not initialize correctly or could behave unpredictably during operation.

4-4 *Transmitter Indicator LEDs*

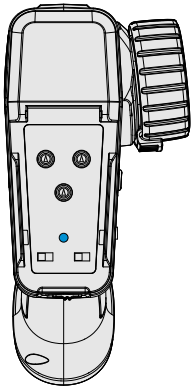

Situation 1:

If the signal becomes weak or is lost, the indicator light will flash quickly.

Situation 2:

If the transmitter battery power is low, the indicator light will flash slowly.

If either of these situations occurs, stop using the model and check the batteries or signal connection immediately to prevent loss of control or accidents.

4-5 *Practice Turning*

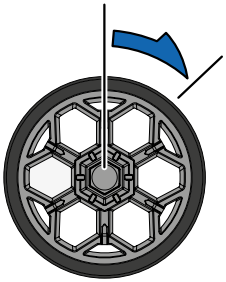

Install the body and have fun!

Allow the model to cool down for at least 15 minutes between runs.

When the car is driving toward you, remember that the steering directions will feel reversed — turning the wheel left makes the car turn right, and vice versa.

Once you are comfortable controlling your RC model, try setting up a simple track or practice area using cones or markers to improve your driving skills.

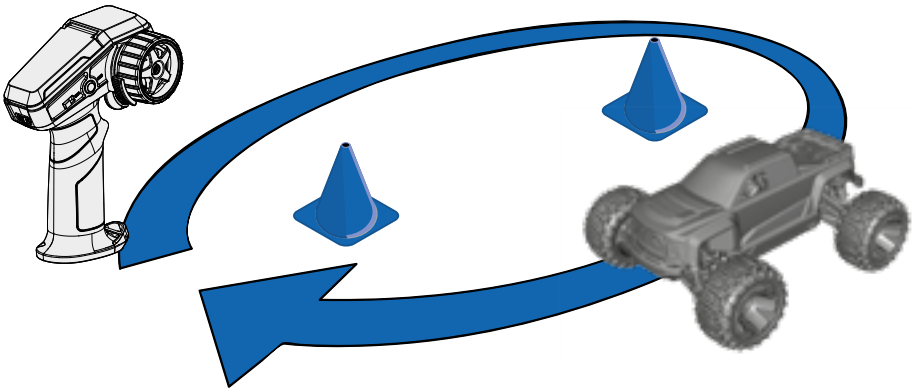

Caution

Do not run your model in water, mud, or sand.

Never drive on public roads or highways — this can cause accidents, injury, or damage to property.

5-1 *Checking Fail Safe*

This car has a built-in fail safe system that will stop the car if the radio glitches, either because of interference or if the car goes out of range.

The fail safe system is automatically setup during binding, but you should become familiar with the function of the fail safe and check the operation before running.

Caution **Any new binding of transmitter & receiver will clear the preset fail safe.**

Caution **The fail safe can not completely protect your car.**

1 ***Set the car so that the wheels can turn, but it will not move, either by putting on a stand or turning upside down***

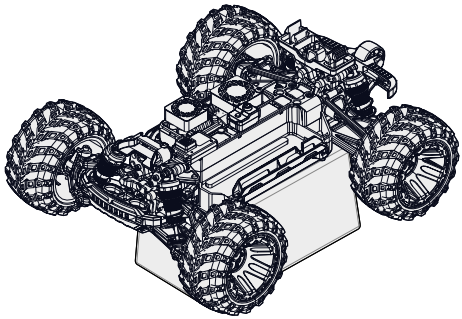

2 ***Turn on the transmitter, and then the car***

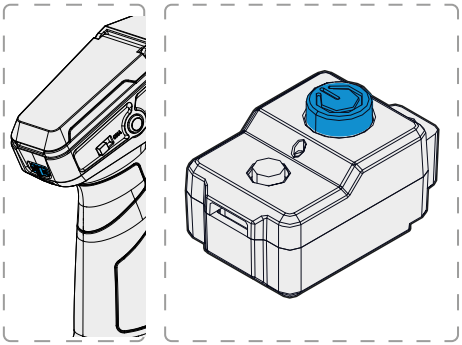

3 ***Move the throttle trigger to turn the car wheels (accelerate).***

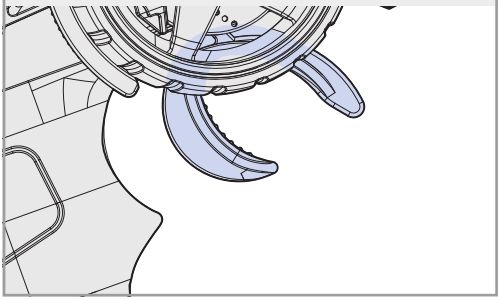

4 ***Whilst the car is running, turn off the transmitter. If the failsafe is working, the car's wheels should stop turning.***

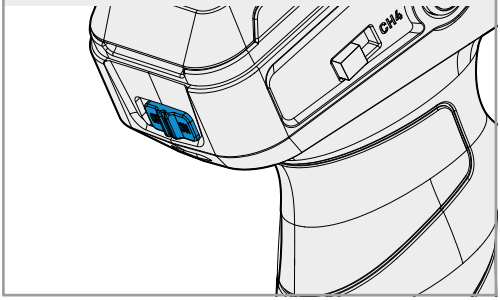

6 CHECKING RADIO RANGE

To check the radio range safely:
Ask a friend to hold the model securely while you walk to the farthest distance you plan to operate it. Use the transmitter controls to confirm that the model responds correctly.

If you notice any delay, loss of signal, or unusual behavior, do not operate the model until the issue is resolved.

Always switch on the transmitter first, then the model.

If the model is powered on before the transmitter, you may lose control.

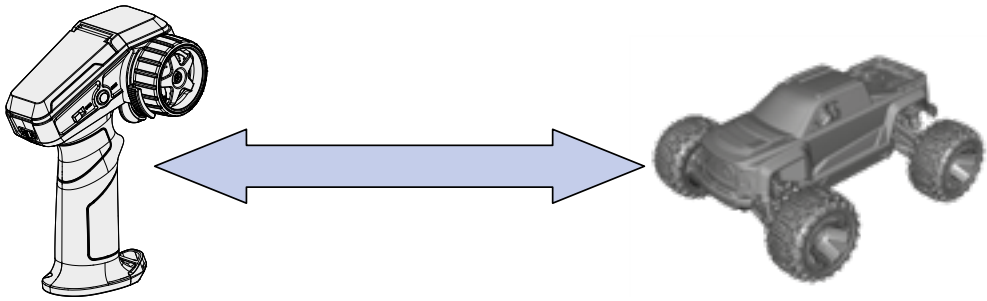

Cautions

The 2.4GHz radio system works best within a clear line of sight.

If the model goes behind solid objects or around corners, you may lose signal and control.

7 BASIC TROUBLESHOOTING

7-1 *Steering Adjustments*

7-1-1 Steering Trim Setup

The steering trim control allows you to make fine adjustments to the steering centre point from your transmitter.

If your RC car does not drive in a straight line when the steering wheel is centred, turn the ST TRIM dial slowly until the car tracks straight.

This adjustment helps keep your RC car driving straight without constantly correcting the steering.

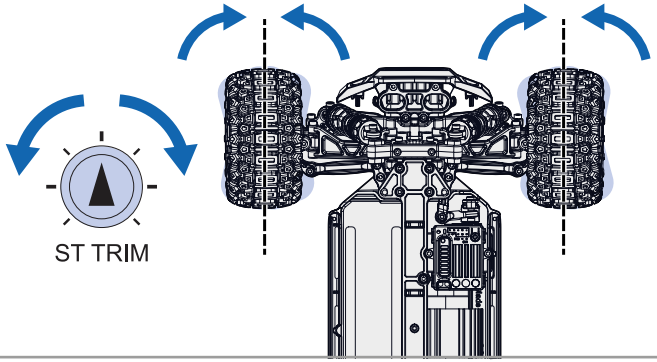

7-1-2 Steering Dual Rate Setup

The Steering Dual Rate (ST D/R) knob adjusts how far the front wheels turn when you steer.

1. Turn the knob clockwise to increase steering throw (tighter turning).
2. Turn the knob anticlockwise to reduce steering throw (smoother control).

For best handling, it's recommended to keep the steering throw within 75%.

This helps avoid excessive turning that can cause the front tyres to rub against the body shell and ensures smoother, more precise steering control.

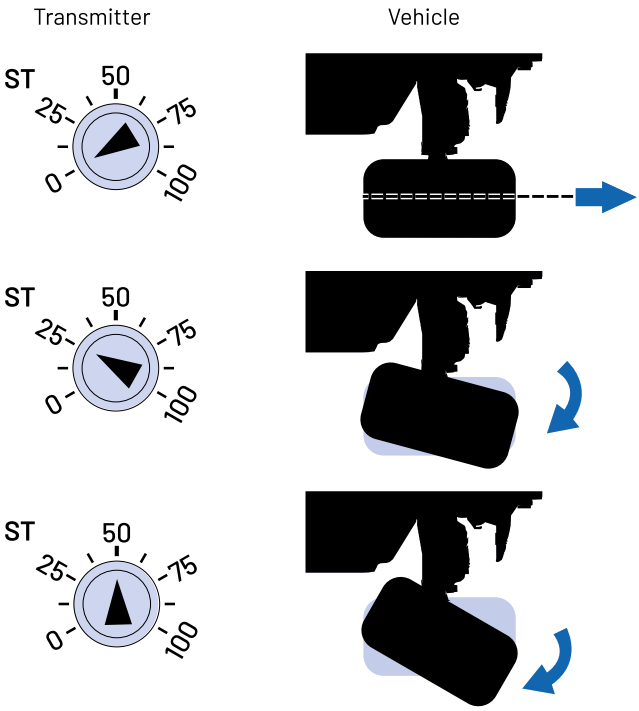

Tip

Adjust the steering dual rate while driving to fine-tune handling — increase it for tight corners or decrease it for better stability at high speeds.

7-1-3 Steering Reverse

If the vehicle turns right when you steer left and turns left when you steer right, flip the "Steering Reverse" switch.



7-2 Throttle Adjustments

7-2-1 Throttle Rate Setup

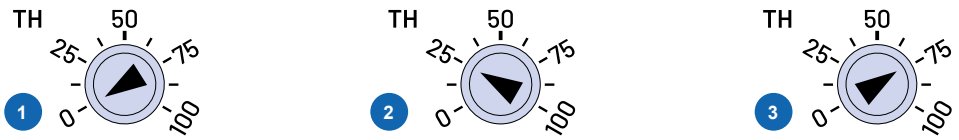

The Throttle Speed Limiter allows you to set the maximum throttle output of your RC model.

1. Knob at “0”: Car will not move even wheel throttle is depressed fully.

2. Knob at “25”: Car will move at 25% of it’s top speed even wheel throttle is depressed fully.

3. Knob at “75”: Car will move at 75% of it’s top speed even wheel throttle is depressed fully.

Start at a lower speed setting until you become comfortable with the handling of your model, then increase as your driving skills improve.

7-2-2 Throttle Reverse

If the vehicle goes backwards when you pull the trigger, flip this switch. If the vehicle goes forwards when you push the trigger, flip this switch.



8-1 *Switching Off*

1. Switch off the model.

Short press (≤ 1 second) the ESC/Receiver power button to turn off the model, then disconnect and remove the battery.

2. Remove the bodyshell.

Refer to Section 1-3 for instructions on removing the body.

3. Turn off the transmitter.

Switch off the transmitter power and remove the batteries if the model will not be used for an extended period.



Attention

Always power OFF the ESC/Receiver before the transmitter to prevent loss of control.



Caution

Disconnect the battery whenever the model is not in use.

If left connected, the vehicle may start unexpectedly or the battery may overheat and cause a fire.

8-2 *Maintenance after driving*

Regular maintenance is very important to keep your RC model in top condition.

After each run, clean the chassis and check all moving parts for any damage or wear.

If any parts are broken or worn out, repair or replace them before your next run.

Routine maintenance helps prevent damage and keeps your model performing reliably.

Completely remove any dirt or debris from the model, paying special attention to the suspension, drive shafts, and steering components.

Check that all screws and fasteners are tight and that no parts are missing or loose.

Use the schedule below as a general maintenance guide.

Interval	Maintenance Item
After every run	Clean chassis and suspension, remove dirt and debris.
Every 10 runs	Check wheels, tires, and bearings. Inspect gears and drive-train for wear.
Every 20 runs	Inspect and clean motor and pinion gears. Check differential and shock absorbers. Lubricate moving parts.
Occasionally	Check radio system, wiring, and connectors. Replace batteries if needed.



Tip

Perform maintenance more frequently if driving in dusty, wet, or sandy conditions.

9 FURTHER INFORMATION

9-1 *Driving in wet conditions*

This model is not designed to be used in wet conditions.

9-2 *Troubleshooting*

If R/C car does not move or you have no control, see below.

If you encounter any other fault whilst operating the vehicle please contact your local hobby shop.

Problem	Cause	Remedy
Does Not Move	Battery is not placed properly in the transmitter.	Place batteries in the transmitter properly.
	Weak or no batteries in transmitter or model.	Install charged or fresh batteries.
	Damaged motor.	Replace with new motor.
	ESC is shut down by heat protection circuit.	Stop driving immediately, do not drive the car until the Speed Controller cools down.
	Binding Setup is incorrect.	Make sure binding is setup properly.
The vehicle does not follow your driving inputs	Servo reverse switch is in the wrong position.	Check the reverse switch settings
	Wires from ESC to motor are improperly connected.	Connect wires from ESC to motor correctly
	Neutral position or trim is incorrect.	Adjust the steering trim.

9-3 ESC Programmable Settings

The following ESC parameters can be programmed to customize motor performance, efficiency, and responsiveness for specific applications.

9-3-1 Running Mode

F/R

This mode is used for Rock Crawlers. It will allow instant switching from forward to reverse for quick car control. Please set the Drag Brake Force to 100% if the Rock Crawler mode is used.

F/R/B

This mode offers Forward, Brake and Reverse. Note, The Reverse function uses a soft start “Double click” function which will only allow reverse to be activated once the motor has stopped moving forward.

9-3-2 Battery Voltage Protection Value

Defines the lowest voltage at which the ESC cuts power to the motor in order to prevent over-discharge. For LiPo batteries, highest value is recommended to maintain battery health. For NiMH batteries, this should be switched off.

9-3-3 Motor Rotation

This setting is used to change the rotation direction of the motor.

9-3-4 Max Brake Force

This mode sets the brakes force that may be applied when the throttle is at full brake. A very large brake force may slow the car quickly, but be aware it can also do damage to the cars drivetrain.

9-3-5 Max Reverse Force

Defines how much power is applied in reverse. High reverse force is generally discouraged, as it can damage gears if used aggressively, especially in high-torque setups. The recommended setting the max reverse force to 25% or 50% for safety and better control, rather than 100%.

9-3-6 Punch

Punch can be used to control overall motor response in relation to the throttle input. The higher the set value, the faster the acceleration. Lower punch settings are advised for softer starts, lower traction, or to help with motor hesitations or stuttering when throttle is applied rapidly.

9-3-7 Drag Brake

This mode allows the setting of an automatic drag brake when the throttle stick is returned to neutral, simulating the slight braking effect of a brushed motor while coasting.

9-3-8 Timing

Adjusting the timing on an RC car's motor has a similar effect to changing gearing. Increasing (or advancing) a motor's timing results in a higher top speed (higher RPM), but Reduced Torque (less pulling power / slower acceleration). A higher timing also leads to shorter run times per battery charge, and the motor will run hotter.

Decreasing a motor's timing results in the following: faster acceleration, more torque / more pulling power and lower maximum speed (useful for small, technical tracks, off road, bumpy terrain etc.). Additionally, the motor will run cooler and the lower timing allows for longer run times per battery charge.

9-3-9 Brake Type

Synchronous is recommended, as it is more efficient and runs cooler. However Asynchronous is an option if you prefer the feel of it during driving, or it is what you are used to from older RC cars.

9-4 *Programming the ESC*

9-4-1 General Programming instructions

The Maverick MSC-4516-BL / MSC-6016-BL ESCs are programmed using the optional Programming Card #151108.

1. With the ESC powered off, hold the "SET" button (located below the power switch), then turn on the ESC. The LED will stay on and a beep will sound, indicating that the ESC has entered programming mode.

2. While in programming mode, continue holding the "SET" button. Release it when the beep pattern matches the desired programming item from the programming table. (Each beep pattern will repeat four times before proceeding to the next item.)

3. After releasing the "SET" button within the selected parameter item, the ESC will begin cycling through the available values, indicated by synchronized LED flashes and beeps. Each value will repeat four times before moving to the next.

4. Press the "SET" button again to confirm your selection. The ESC will reboot and resume normal operation.



Refer to **Section 9-4-4** for settings.

9-4-2 Throttle Calibration Mode

Throttle Calibration Mode is used to teach the ESC what the transmitter's minimum, maximum, and neutral throttle signals are, so it can control your motor correctly.

Before you begin this procedure, make sure your Transmitter has the TH D/R set to 100%.

1. Move the throttle trigger to full throttle, the ESC will beep once

2. Then move the throttle trigger to full brake, the ESC will beep twice.

3. Then release the throttle trigger to the neutral position, the ESC will beep three times.

4. Power off the ESC to save the calibration settings.

9-4-3 Brake Mode

Linear: Braking force is fixed at Max Brake Force value regardless of the motor speed.

Proportional: Braking force is proportional to the motor speed. E.g. at 50% max. Motor RPM, 50% Max Brake Force value is applied. At 100% max. motor RPM, 100% Max Brake Force value is applied.

9-4-4 Default Settings/Options

Programming Item		Beep Sound	Number of LED Flashes								
			LED Flash 1×	LED Flash 2×	LED Flash 3×	LED Flash 4×	LED Flash 5×	LED Flash 6×	LED Flash 7×	LED Flash 8×	LED Flash 9×
1	Running Mode	Short "beep" x2	Forward with brake	P F Reverse/ Forward with brake							
2	Low Voltage Cutoff	Short "beep" x3	No Protection	2.8V	F 3.0V	P 3.2V					
3	Motor Rotation Direction	Short "beep" x4	CCW	P F CW							
4	Max Brake Force	Long "beep"	20%	30%	40%	50%	F 60%	P 70%	80%	90%	100%
5	Max Reverse Force	Long "beep", Short "beep"	P 15%	25%	F 50%	100%					
6	Punch	Long "beep", Short "beep" x2	Level 1	F Level 2	Level 3	P Level 4					
7	Drag Brake Force	Long "beep", Short "beep" x3	P F 2%	4%	7%	10%	14%				
8	Motor Timing	Long "beep", Short "beep" x4	2°	4°	F 8°	15°	22°	P 30°			
9	Brake Mode	Long "beep", Short "beep" x5	F Linear	P Proportional							
	Restore Factory Defaults	Long "beep", Short "beep" x6	Restore Factory Defaults								

P QByte Pro Factory setting | F QByte Flux Factory setting

Note: Using "Restore Factory Defaults" will reset the ESC to the original settings applied during manufacturing. These factory settings have been optimized specifically for this car. Therefore, if you use the Restore Factory Defaults function, you must review the parameters and compare them with the table above to ensure they match the original factory configuration.

FCC COMPLIANCE STATEMENT

This device transmits in the range 2.4 to 2.4835 GHz and has been tested to comply with the limits for a Part 15 Class B device of the FCC rules. These limits are designed to provide reasonable protection against harmful interference in a residential installation. This equipment generates, uses and can radiate radio frequency energy and, if not installed and used in accordance with the instructions, may cause harmful interference to radio communications. Any change or modification to the device not expressly approved by the manufacturer may void the user's authority to operate the equipment. Operation is subject to the following two conditions:
(1) This device may not cause harmful interference, and (2) This device must accept any interference received, including interference that may cause undesired operation.

Canada Compliance Statement:

This Class B digital apparatus complies with Canadian ICES-003. (Cet appareil numérique de la classe B est conforme à la norme NMB-003 du Canada.) This equipment complies with the FCC/IC radiation exposure limits set forth for FCC and Industry Canada portable transmitting devices operation in an uncontrolled environment. The equipment should only be used or installed at locations where there is normally at least a 20cm separation between the antenna and all persons. This transmitter must not be co-located or operated in conjunction with any other antenna or transmitter.

CE Compliance statement

The radio equipment type in this product transmits in the frequency range 2.4 to 2.4835 GHz with a maximum power of 18dBm and is in compliance with EU Directive 2014/53/EU. The full text of the Declaration of Conformity is available at www.hpiracing.com/ce

Cet appareil transmet dans la gamme de fréquence de 2,4 à 2.4835 GHz avec une puissance de 18dBm et est conforme à la Directive UE 2014/53 / UE.
Le texte intégral de la Déclaration de conformité est disponible sur www.hpiracing.com/ce

El tipo de equipo de radio en este producto transmite en el rango de frecuencia de 2.4 a 2.4835 GHz con una potencia máxima de 18dBm y cumple con la Directiva de la UE 2014/53/UE. El texto completo de la Declaración de conformidad está disponible en www.hpiracing.com/ce

HPI RACING A/S

Jegindoevej 21
8800 Viborg, Denmark
Email: info@hpiracing.com
WWW.MAVERICK-RC.COM